PHILIPS

PHILIPS

N2238

N2238 CUSTOMER HANDBOOK

Control Locations

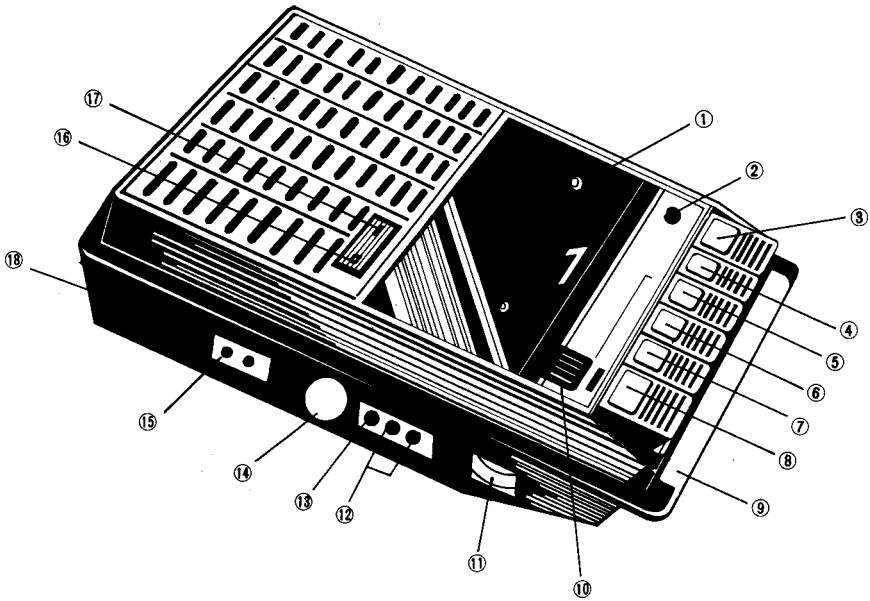

1. Cassette Door
2. Record L. E. D.
3. Pause
4. Stop-eject
5. Play
6. Fast Forward
7. Rewind
8. Record
9. Carrying Handle
10. Microphone (inbuilt)
11. Volume Control
12. External Microphone Socket with Remote Control Pin
13. Earphone Socket
14. Din Record Replay Socket
15. Mains Cord Receptacle
16. Tape Counter
17. Counter Reset Button
18. Battery Cover (underneath at rear)

Please read these instructions carefully so that you can get full use of the features included in the cassette recorder.

Unpacking

Carefully remove the unit from its packing and check that you have found your warranty and mains cord.

Lay the unit on its top on a soft surface and remove the battery cover (18) by sliding it towards the back. Insert 4 (four) "C" type cells. Take careful note of the polarity of each. There is a diagram moulded into the compartment for your convenience. Replace the battery cover.

Mains Operation

Insert the small socket end of the mains cord supplied into the mains cord receptacle (15). Plug the other end into an approved 240 volt outlet point.

By plugging in the mains cord, the batteries will be disconnected. To extend the life of the batteries, we advise using the mains cord when possible.

Operation

Press the stop-eject button (4) and the cassette door (1) will open. Insert the cassette with the desired side up and the open edge to the front. Close the cassette door (1).

Press the play button (5) and adjust the volume control (11) to the desired level. At the end of the tape the automatic stop will operate. If you wish to stop before the end, then press the stop-eject button.

If you wish to replay all or part of the tape, press the rewind button (7). Note the tape counter (16) for the position you wish to return to.

Note: Auto stop does not operate on fast forward or rewind mode. To stop the rewind, press the stop eject key (4).

To move forward quickly to a special track, press the fast forward button (6) and note the counter (16). When you reach the point you want, press the stop-eject button (4) and then the play button (5).

Tape Counter Reset

To reset the counter (16) press the counter reset button (17). This will help you to find the beginning of a track or remember the point you started recording.

Recording from Inbuilt Microphone

The inbuilt microphone (10) enables you easily to record messages or music.

Open the cassette door (1) and insert a new unrecorded tape. It is necessary that the plastic tags over the holes at the back edge of the tape are intact.

To start recording, push the play button (5) and record button (8) together. The record L.E.D. (2) will light and show that the unit is recording.

The circuit of the recorder automatically adjusts the recording level. There is no need to touch the volume control.

If you wish to stop the tape for a short time, press the pause button (3). This will stop the tape moving but leave the circuit operating.

To record from a remote microphone with switch plug into the external microphone socket (12), insert a tape and press the play button (5) and record button (8). You can now record by speaking into the remote microphone.

For private listening, plug your earphone into the earphone socket (13).

The recorder may be connected to other sound equipment by connecting a 5 pin din plug into the din record replay socket (14).

Care of the Unit

- Never expose the unit to extreme heat.
- Do not use solvents to clean the case.
- Remove discharged batteries.
- Remove batteries if the unit is not used for prolonged periods.

Care of Tapes

- Always store cassettes in their boxes.
- Do not leave cassettes near to a strong magnetic source, i.e. speakers.
- If a cassette becomes unwound while stored, tighten by inserting a pencil in the spool and gently winding.
- To prevent recording over wanted program material, remove the plastic tag from the back edge of the cassette when recording is completed.

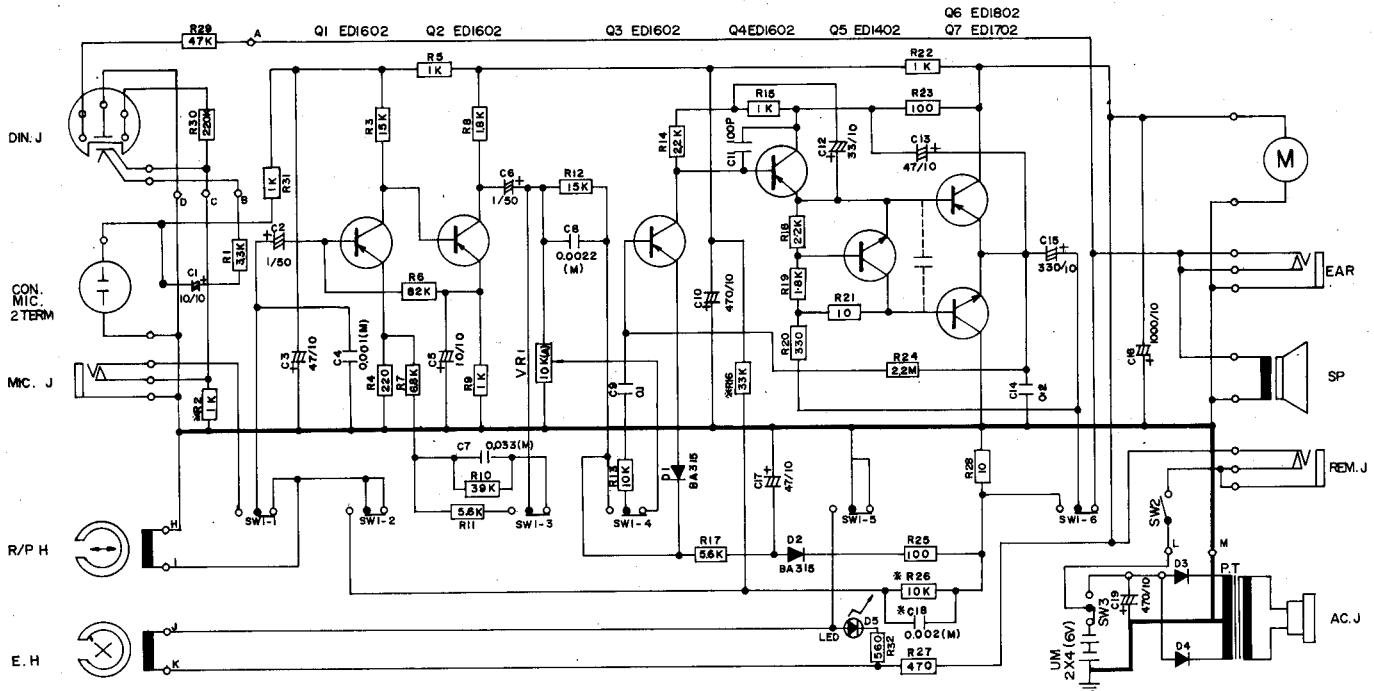
Q1 ED1602
Q2 ED1602
Q3 ED1602
Q4ED1602
Q5 ED1402
Q6 ED1802
Q7 ED1702
DIN. J
CON. MIC. 2TERM
MIC. J
R/P H
E. H
EAR
SP
REM. J
AC. J
M
P.T
LED
UM 2X4 (6V)
R29 47K
R30 220K
R31 1K
R1 33K
R2 1K
C1 10/10
C2 1/50
C3 47/10
C4 0.001(M)
R3 15K
R4 220
R5 1K
R6 82K
R7 68K
C5 10/10
R9 1K
R8 1.8K
C6 1/50
R12 15K
C8 0.0022 (M)
VR1 10KΩ
C9 01
C7 0.033(M)
R10 39K
R11 5.6K
R13 10K
D1 BA315
R14 22K
C10 470/10
R15 1K
C11 100P
C12 33/10
R16 33K
R17 5.6K
D2 BA315
R18 2.2K
R19 1.8K
R20 330
R21 10
R22 1K
R23 100
C13 47/10
C15 330/10
R24 2.2M
C14 02
R28 10
R25 100
* R26 10K
* C18 0.002(M)
R27 470
R32 560
D5
C16 1000/10
C17 47/10
C19 470/10
D3
D4
SW1-1
SW1-2
SW1-3
SW1-4
SW1-5
SW1-6
SW2
SW3